TMI-2 DEFUELING CANISTERS

FINAL DESIGN TECHNICAL REPORT

DOCUMENT NO. 77-1153937-04

Published: May 24, 1985

Babcock & Wilcox Company
Nuclear Power Division
Lynchburg, Virginia

Prepared for
GPU Nuclear Corporation
Under Master Services Contract 665-3212

8712020008 871125
PDR FOIA
AUDIN87-730 PDR

A-2

TMI-2 DEFUELING CANISTERS
FINAL DESIGN TECHNICAL REPORT

Prepared by: G.M. Jacks, Principal Engineer, B&W — 5/24/85 Date

Approved by: E.J. McGuinn, Senior Engineer, B&W — 5/24/85 Date

Approved by: W.G. Pettus, Advisory Engineer, B&W — 5-24-85 Date

Approved by: P.C. Childress, Project Manager, B&W — 5-24-85 Date

CONTENTS

		Page
A.	ABSTRACT	1
B.	INTRODUCTION	2
C.	DESIGN CRITERIA AND FUNCTIONAL REQUIREMENTS	4
D.	MECHANICAL DESIGN	7
E.	STRUCTURAL ANALYSES	24
F.	SUMMARY OF CRITICALITY ANALYSES	36
G.	OPERATIONAL DESCRIPTION/PLANT INTERFACES	41
H.	CONCLUSION	45
I.	REFERENCES	46

ATTACHMENTS

1.	ASME CODE SECTION VII STRESS REPORT	1-1	(2)(3)
2.	CRITICALITY ANALYSIS DETAILED REPORT	2-1	(2)(3)

TABLES

Table Number		Page
1	Canister Design Criteria/Conditions	4
2	Canister Interface Parameters	23
3	Canister Load Cases	30
4	Summary of ASME Code Analysis	31
5	Impact Loads	33
6	Results of 3-D KENO Criticality Calculations	39

FIGURES

Figure Number		Page	
1	Fuel Canister	14	(1) (2)
2	Fuel Canister Bulkhead View	15	(1)(2)
3	Fuel Canister Cross-Section	16	(1)
4	Filter Canister	17	
5	Filter Canister, Cross-Section at Mid-Plane	18	(1)
6	Filter Cartridge	19	
7	Knockout Canister	20	(1)(2)
8	Knockout Canister, Cross-Section at Midplane	21	(2)
9	Inlet/Outlet Flow Fitting Plug	22	(1)(2)
10	Deleted		(2)
11	Pressure Retaining Boundary	34	
12	Shell Deformations - Vertical Drop	35	
13	Deleted		(1)

A. ABSTRACT

Babcock & Wilcox (B&W) has developed designs for three TMI-2 defueling canisters - Fuel, Filter and Knockout. The canisters will retain and encapsulate core debris ranging in size from very small fines to partial fuel assemblies. These canister designs are engineered to maximize fabrication efficiency and to be compatible with all specified interfaces, including handling, on-site storage, shipping cask, and draining (1) operations. Dimensional studies, including tolerance stack-ups, have verified that the canister tooling and equipment interfaces are acceptable at operating temperature and conditions. Analyses and (4) qualitative judgments indicate that the k_{eff} meets all criticality objectives for single and array conditions. All stress values, for the pressure conditions defined by the GPUN technical specification[1] are within ASME Code[2] allowables. (1)

B. INTRODUCTION

This report presents the designs of the three canisters to be used in defueling of TMI-2 developed under a contract to GPUN by Babcock & Wilcox. Included are designs for the two types of filtering canisters (the Defueling Water Cleanup System (DWCS) or Fines/Debris Vacuum System (F/DVS) Filter Canister and the F/DVS Knockout canister) and the Fuel Canister. Changes from Revision 0 are denoted by a bracketed number in the right margin. This revision supercedes and replaces Revisions 0,1,2, and 3 of this report and Revisions 0 and 1 of Reference 4. (1)(2)(4)(4)

Compatible with the spent fuel pool environment, these canisters provide an effective containment for the long term storage of the TMI-2 core debris. In conjunction with the defueling system, the canisters will retain and encapsulate debris ranging in size from very small fines to partial fuel assemblies. In combination with the shipping cask the shipping package will satisfy all the 10CFR71 containment requirements. Criticality considerations were factored into the canister design to ensure that the canister contents will remain subcritical under all TMI-2 site conditions. Quick disconnect fittings located in the upper head permit dewatering of the canister contents. Pressure relief valves to limit the internal pressure in the canisters can also be installed on either of the quick disconnect fittings. (2)(1)(4)(4)(2)

The fuel canister is a receptacle for large pieces of core debris that can be picked up by the defueling grapple and placed in the canister. For this reason, the upper closure head is removable to permit easy access for debris loading. An internal shroud controls the size of the internal cavity and provides a means of encapsulating the neutron absorbing material used for criticality control.

As part of the debris vacuum system, the knockout canister separates the medium size debris from the water by reducing the flow velocities,

thereby allowing the particles to settle out. An internal screen helps retain all but the very small fines in the canister. An array of four rods around a larger central rod, all containing boron carbide (B_4C) pellets, is included for criticality control. All flow connections are located on the upper head. (2)(4) (1)

To remove very small fines, the filter canister utilizes filter elements fabricated from a stainless steel media. These elements are joined together to form a filter bundle permitting a flow rate up to 125 gpm while filtering out particles as small as 0.2 microns. A center rod containing B_4C pellets ensures that the canister contents remain sub-critical. Like the other two types of canisters, all the interface connections (piping and handling) are on the upper head. Both in the F/DVS and DWCS a system pressure relief valve maintained by GPUN is assumed to keep the pressures within design values. (2) (4)

All structural components except the fuel canister bolts are fabricated from 300 series low carbon stainless steel that are widely used within nuclear industry. The bolts are made from Inconel 625. These materials provide both excellent corrosion resistance in a water environment and tough, resilient structural properties. Boron carbide is used as the neutron absorbing material. This material has been used extensively in spent fuel storage rack and control rod designs in conjunction with stainless steel for more than twenty years. (4)

The criteria for the design of the TMI-2 Defueling canisters is given in Section C of this report. Section D presents a description of the mechanical designs for three canisters. Results from structural analyses and criticality analyses are summarized in Sections E and F. A description of the operational procedures for the canisters with a listing of required plant interfaces is given in Section G. Attachment 1 is the ASME Code Section VIII Stress Report. The details of the criticality analyses are presented in Attachment 2. (2)

C. DESIGN CRITERIA AND FUNCTIONAL REQUIREMENTS

The canister design criteria and functional requirements are detailed in Appendix E of Reference 1 and are summarized in Table 1.

TABLE 1

CANISTER DESIGN CRITERIA/CONDITIONS

General Design Criteria and Specifications:

- Maximum loaded weight - Dewatered: 2800 pounds
- Envelope Max. Dimensions: Overall Length: 150.0 inches (max.)
  Outer Diameter: 14.00 inches (nom.)
- Material: 316L stainless steel or equivalent
- Thirty year design life. (1)
- Empty canister will be non-buoyant
- Capability for venting, dewatering (draining/gas inerting) and leak testing (1)
- Chemical compatibility with TMI-2 and INEL pools
- Interface compatibility with site handling equipment
- 20 um nominal particle size limit in effluent during dewatering (1)
- Provisions for hydrogen/oxygen recombiner catalyst
- Removable pressure relief valve to limit internal pressure to 15 psig in canister after loading. (1)

- Conform to ALARA guidelines
- Neutron absorbing materials are to be fully encapsulated in stainless steel

Criticality Criteria:

- Analyses per 10CFR72.73 and ANSI 8.1, 8.17, 16.5 and 16.9
- Use optimal fuel size, volume fraction and enrichment
- Criticality limits - $k_{eff} \leq .95$; single or array, faulted or normal
- Criticality limit without poison - $K_{eff} \leq .95$; single canister, normal configuration

Quality Assurance Program:

- 10CFR50 and vendor Q/A procedures

Structural Requirements/Loadings:

- Maintain structural integrity for criticality control under all loadings due to normal handling and cask loading operations
- Analysis per ASME Code - Section VIII Subsection UW (Lethal)
- Internal pressure - 150 psig design pressure ($180^{o}F$) (3)

  - 225 psig hydrostatic test pressure (room temp)
- External pressure - 30 psig design pressure ($180^{o}F$) (3)
- Design drop accident - 11'7" in air or 6' 1 1/2" in air followed by (2)

19'6" in water. Impact at any orientation. Criticality control must be maintained, but deformation and/or leakage is acceptable.

o Cask packaging interface parameters (1)

Max. impact acceleration loads @ canister interface	- 40 g's axial - 100 g's lateral - continuous support (cylinder within cylinder) with no more than a 1/2 inch gap between canister and the support cylinder (1)

Performance Requirements:

Fuel Canister

- Capability to be handled without top closure installed
- Accept partial length full cross section fuel assembly
- Determine maximum weight of debris that can be dropped full length of can (see Section F for discussion). (1)

Filter Canister

- Accept particulate ranging in size up to 800 micron (1)
- Effectively filter out all particulate greater than 0.5 micron (nominal)
- Flow rate of up to 125 gpm

Knockout Canister

- Hydraulic performance criteria not in B&W's scope of supply

D. MECHANICAL DESIGN

The canisters consist of a circular pressure vessel encapsulating one of three internals modules depending on the function of the canister. Except for the bolted upper closure head on the fuel canister, the basic pressure vessel (outer shell) is the same for all three canister designs. Similarly, the handling interfaces are identical to allow the same handling tool to be used. Different functional requirements dictated differences in the piping interfaces and the design of the internals modules. Tolerance studies on the canisters and their (1)
internal components have been performed and are available for review at B&W. This section of the report presents a discussion of the canister's generic features followed by a detailed description of the three individual designs - fuel, filter, and knockout canisters.

Generic Canister Features

Common to all three canister designs, the outer shell serves as a pressure vessel protecting against leakage of the canister's contents as well as providing structural support for the neutron absorbing materials. It is sized to withstand the pressures associated with normal operating conditions and hydro testing. To combine high structural efficiency with reasonable costs, the canister is fabricated from a section of welded pipe requiring only standard manufacturing techniques. Adequate margins of safety for both external and internal design pressures have been demonstrated for the 14.00 inch O.D. pipe with a 0.250 inch wall. All joints in the outer shell are full penetration welds with full radiographic or ultrasonic inspection. A reversed dished tank end is used for the lower closure head for all the canisters while the upper head design varies according to the canister's function. All (1)
fittings are quick disconnect and are located in the upper head for easy access. A skirt is used on the upper head to protect the fittings from side impacts. All fittings are torqued in place using an approved

sealant meeting high purity standards and capable of maintaining the seal for the design life of the canister. (B&W has identified that Nuclear Grade PST Pipe Sealant #580 by Loctite Corp. of Newington, Conn. is an acceptable sealer when the batch to be used meets purity requirements given in the canister assembly specification and it is used per the manufacturer's instructions. Other sealants may also be acceptable.) A recessed grapple interface provides single point pickup with low susceptibility to shipping damage. Water trapped by the skirt and handling recess is drained by a machined hole through the bulkhead (filter and knockout) or cover (fuel). (1)(2)(3)

A recombiner catalyst package is incorporated into the upper and lower head of all the canisters. The catalyst recombines the hydrogen and oxygen gases formed by radiolytic decomposition of the water entrapped in the wet debris. This reduces the buildup of internal pressure in the canister and keeps the gases below their flammability/explosive limits. The redundant locations ensure that an adequate amount of catalyst is available with the canister in any orientation.[5] The catalysts have been placed in locations consistent with maintaining their function after a drop accident.

won't function this way if water near b with resin

The same basic dewatering system is used to remove the slosh water in all three types of canisters prior to shipment. Inert (Argon or Nitrogen) gas introduced into the top of the canister drives the free water to the bottom sump, through the internal drain line and out of the canister to a defueling water processing system. The inert gas is later stabilized at 30 psia to serve as a cover gas for long term storage. All dewatering fittings are Hansen self-sealing types that can be capped or hold a removeable pressure relief valve. The fitting and cap seals are made of Ethylene Propylene (EP). (2) (4)

No pyrophoric reaction of the small zirconium (fuel rod clad material) fines in the canister is expected, especially with the "drip-dry" condition of the debris after dewatering.[5]

A summary of the canister interface parameters is presented in Table 2.

Fuel Canister Design

The fuel canister, Figures 1, 2 and 3, consists of a cylindrical pressure vessel with flat upper closure head. It utilizes the same generic outer shell as the other canisters except for its removable upper closure head that is attached with bolts. Within the shell, a full length square shroud forms the internal cavity. This shroud is supported at the top by a bulkhead that mates with the upper closure head. The shroud and debris rest on a support plate that is welded to the shell. The support plate has impact plates attached to help absorb canister drop loads and payload drop loads.

The canister's square-within-a-circle configuration is evident in the design of the upper bulkhead (Figure 2). Tapped to accept the bolts attaching the upper closure head, the bulkhead's top surface also interfaces with the seal-ring in the closure head to seal the canister. A drain tube is welded into a machined hole in the bulkhead. Two non-symmetrical locating pins on the upper surface ensure the closure head is installed in the correct orientation. Circular indentations in the sides of the square opening provide an interface with the canister lifting tool when the closure head is not installed. (1)

The shroud assembly consists of a pair of concentric square stainless steel tubes seal welded to completely encapsulate four sheets of Boral, a neutron absorbing material. Across the diagonal, the shroud is dimensionally only slightly smaller than the outer shell's inner diameter. The space between the shroud and the shell is filled with a low density concrete mixture of cement, glass bubbles and demineralized water (Figure 3). The shroud has a slip fit with its mating surface on the bulkhead; this allows the projected 4.6×10^{-6} ft^3/day of Hydrogen generated by radiolysis from the concrete to be directed to the upper recombiner catalyst bed. The inner cavity of the shroud, a 9.00 inch square, encompases the fuel assembly's square envelope of 8.54 inches. Based on refueling experience, B&W expects that these canister dimensions should ensure that partial fuel assemblies meeting the (1) (2)

may not be valid based upon H_2O - resin reaction

cross-section dimensions of normally irradiated fuel can be inserted into the canister.

The upper closure head is attached to the bulkhead by eight equally spaced 3/4 inch diameter bolts. These bolts are sized for the pressure loads and postulated impact force due to shifting of the canister contents during a shipping accident. All the bolts are captured within the closure assembly and handled as an assembly. Alignment pin holes and the drain valve hole match the corresponding items in the bulkhead. Grooves for the two metallic seal-rings - around the square opening and drain line - are machined into the bottom side of the head. These seal-rings are attached to the upper head using small screws and spring clips, allowing them to be remotely replaced with manipulators if the closure head is ever removed (i.e., for debris sampling at INEL). (2)

Filter Canister Design

As part of either the Defueling Water Cleanup System or the Fines/Debris Vacuum System, the filter canister, Figures 4, 5 and 6, is designed to remove very small debris particles from the water. Externally, it is very similar to the other canister types, especially the knockout canister. The filter assembly module that fits inside the canister shell was designed by the Pall Trinity Micro Corporation and B&W to remove particulates in the range from 0.5 to 800 microns. Flow into and out of the filter canister is through 2 1/2" cam and groove quick disconnect fittings. After loading, the fittings are plugged using special expanding mandrel plugs (Figure 9) that incorporate elastomer (Ethylene Propylene Diene Monomer) seals. The expanding mandrel plug will allow quick, repetitive access to the canister internals for research. (1) (1) (2)(3) (3)(4)

The internal filter assembly module consists of a circular cluster of 17 filter elements, a drain line and a neutron absorber assembly (Figure 5). Each filter element is made up of eleven filter modules joined axially forming a continuous internal drain tube inside an annulus of filter media. The influent enters the upper plenum region, flows down

past the upper support plate, through the filter media and down the element drain tube to the lower sump. The flow is from outside (shell side) to inside (internal drain tube side) with the filtered particulate remaining around the outer perimeter of the filter elements. The filtered water exits the canister via the drain line. The following discussion describes the detail design of the assembly starting with the filter module followed by the longer filter element and finally, the filter bundle assembly itself. Testing of both prototype[15] and production[16] modules have characterized their performance. (2)

The 11.0 inch long filter module (Figure 6) is the basic building block in the filter system. It is based on the concept of a pleated filter media forming an annulus around a central, perforated drain tube. Fabricated from a porous stainless steel material, the media is pre-coated with a sintered metal powder to control its pore size. The media and the center support tube are induction brazed to stainless steel end plates. Two bands are placed around the outer perimeter of the pleated filter media at intermediate positions along the length of each module. These bands restrict the unfolding of the pleats if a back-wash (reversed flow) is used to clean the particulate off the filter media.

Eleven filter modules are stacked over a continuous 126" long 1/8" wall perforated tube and are then welded end-to-end to form a filter element. Only the ends of the module stack are welded to the continuous center drain tube. The drain tube is plugged at the top forcing the water flow downward. This top plug mates with a hole in the upper support plate to restrain the lateral movement of the element. At its bottom end, the drain tube is seal welded into a hole in the lower header.

The filter bundle assembly consists of an array of 17 filter elements, a drain line and an absorber assembly in a concentric circular pattern (Figure 5). As previously described, the individual filter elements are held in place by the upper support plate and lower header. The elements are positioned axially such that the module end caps are aligned for a minimum overlap of 1/4 inch. The bundle is tightly encirled at five

axial locations by stainless steel bands, .020 thick x .375 wide, to prevent element bowing and ease bundle assembly into the canister shell. The lower header is welded to the outer shell of the canister to provide a boundary between the primary and secondary side of the filter system. The upper header is equipped with a series of openings to allow for the passage of the influent slurry into the filter section of the canister and to protect the filter media from direct impingement of particles carried in the influent flow. Six tie rods position the upper plate axially relative to the lower support plate. The upper plate is chocked into place with blocks that are tack welded to the outer shell. (1)

Criticality control is provided by an absorber assembly located within the filter element array to ensure that the canister will be sub-critical under all conditions. It is comprised of a 2.50 inch O.D., .125 inch wall outer protection tube and a 2.125 inch O.D. inner poison rod filled with neutron absorbing material, B_4C pellets. End caps are welded to the top and bottom of the rod to fully encapsulate the B_4C material. This ensures that the canister will be sub-critical under all conditions. Section F on criticality summarizes the results of the analyses. Details of the analyses are reported in Attachment 2. (1) (4) (2)

Knockout Canister Design

Designed to separate debris ranging in size from 140 microns up to whole fuel pellets, the knockout canister, Figures 7 and 8, is part of the Fines/Debris Vacuum System. The influent comes directly from the defueling vacuum system inside the reactor while the outlet flow goes to a filter canister for further treatment. Flow fittings are 2" cam and groove type and are capped or plugged after use similar to the filter canister. Externally, the knockout canister is very similar to the other canisters utilizing the same outer shell design. It also incorporates the same handling tool interface. The knockout canister internals design are the result of a joint effort between B&W and Westinghouse. B&W's scope of supply is the structural design and the criticality analysis while Westinghouse is responsible for the flow/debris separa- (1)

tion performance.

The internals module for the knockout canister is supported from a lower header welded to the outer shell and is positioned by chock blocks at the upper header. An array of four outer absorber rods around a central absorber rod is located in the canister for criticality control. The four outer rods are 1.315" O.D. tubes filled with neutron absorbing material, B_4C pellets. The central absorber rod is similar to the one (4)
used in the filter canister. It is comprised of a 2.875" O.D., .312"
wall outer sheath surrounding a 2.125" O.D. rod filled with B_4C pellets. (4)
Lateral support for the absorber rods and center assembly is provided along their length by the intermediate support plates that have a small radial clearance to the shell (Figure 8). (2)

The influent flow is directed tangentially along the inner diameter of the shell setting up a swirling action of the water within the canister. As the flow velocities decrease the larger particulate settles out and the water moves upwards, exiting the canister through a machined outlet in the head. A full flow screen (20 mesh) ensures that no large parti- (1)
cles escape from the canister.

The annulus between the 2.25" I.D. outer sheath and poison rod serves as the drain tube for canister dewatering. The sheath is welded to the bottom support plate and has an outlet at the top welded to the upper head. The lower support plate has drain holes covered by a "Rigimesh" 20 um (nominal) filter which combine to form a drain sump in the lower (1)
head. The concentric tube/Rigimesh concept has been successfully tested at simulated debris heights ranging up to 96".

Figure 1

Fuel Canister

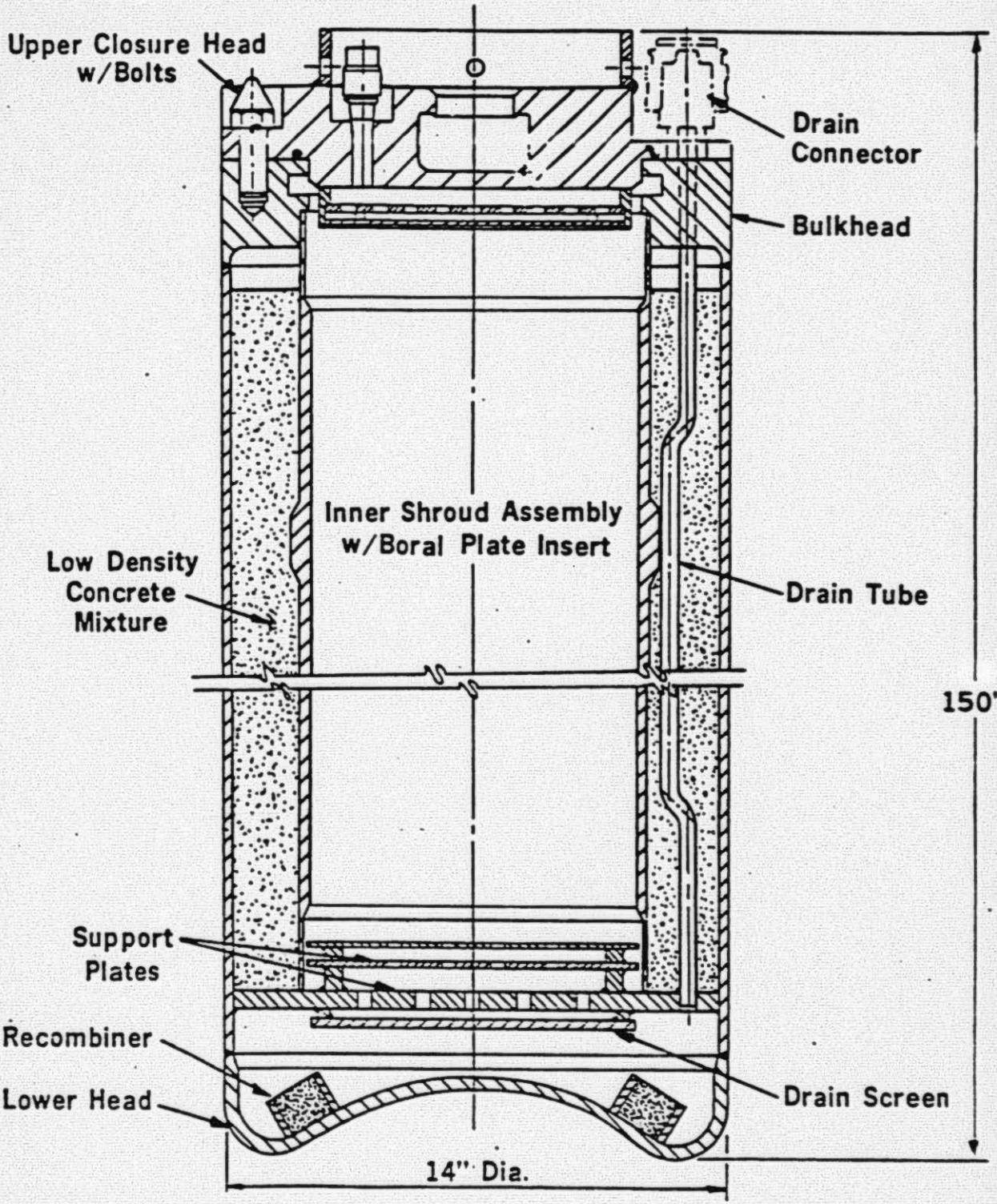

Figure 2

Fuel Canister Bulkhead View

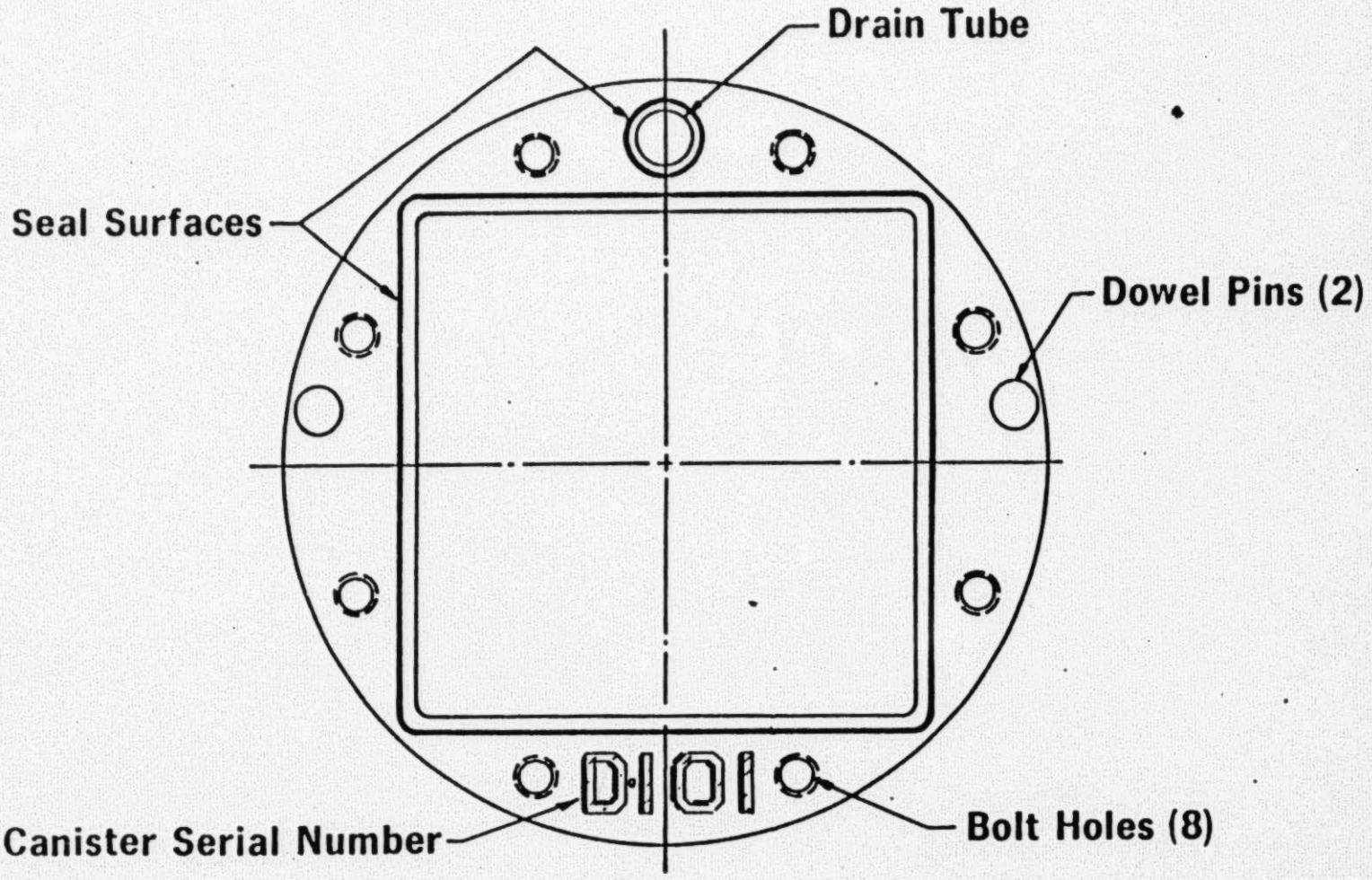

Figure 3

Fuel Canister Cross Section

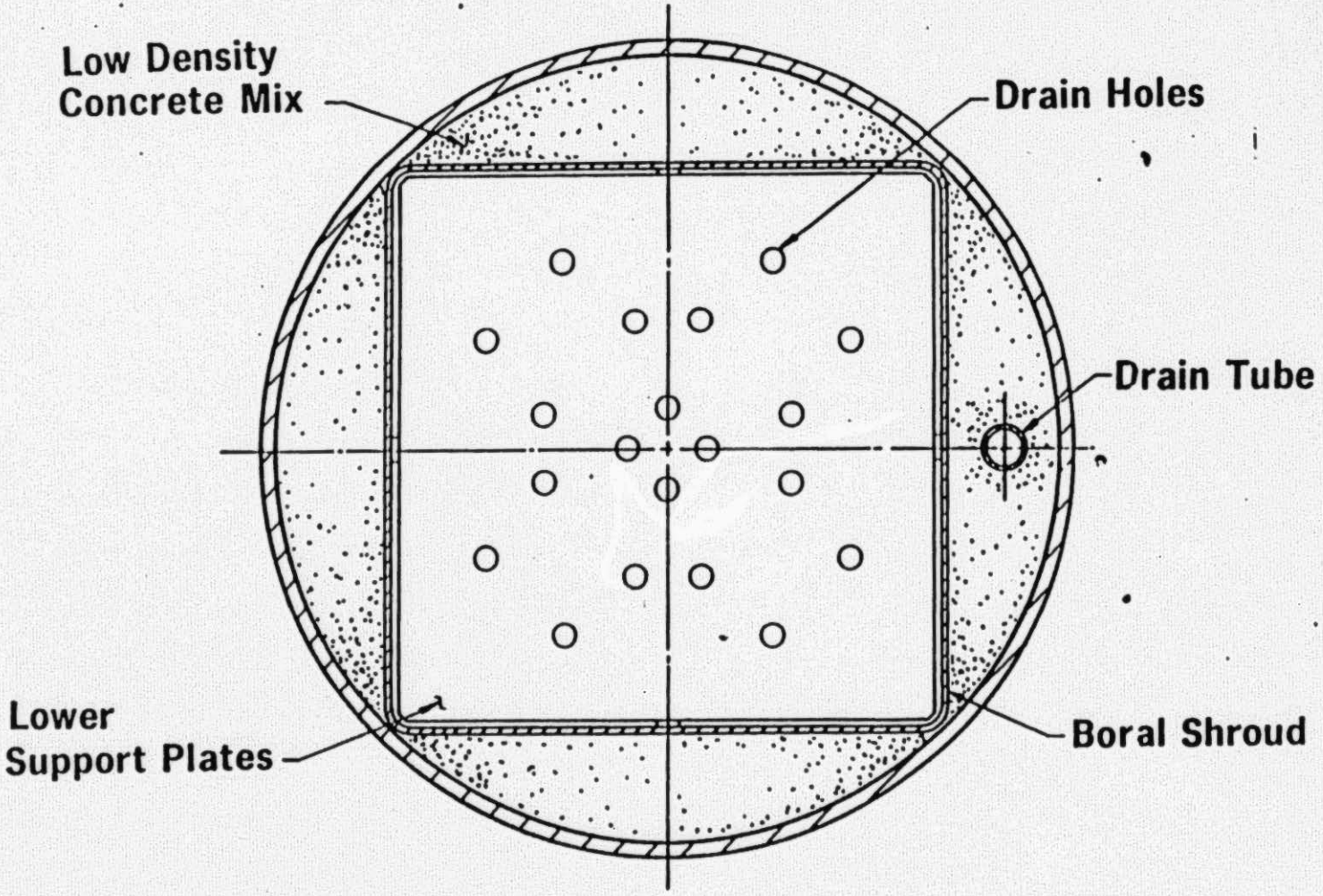

Figure 4

Filter Canister

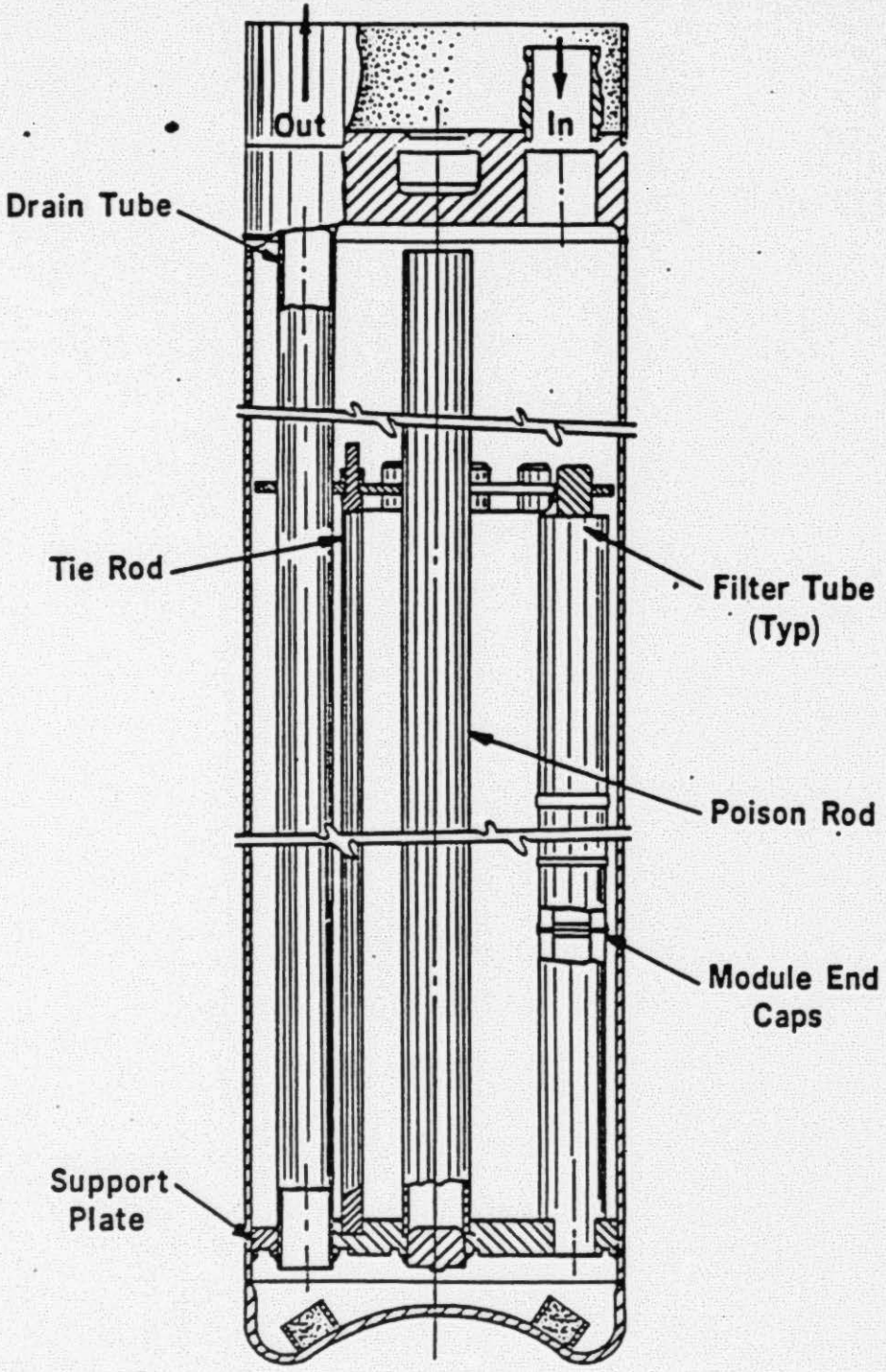

Filter Canister - Cross-Section at Mid-Plane

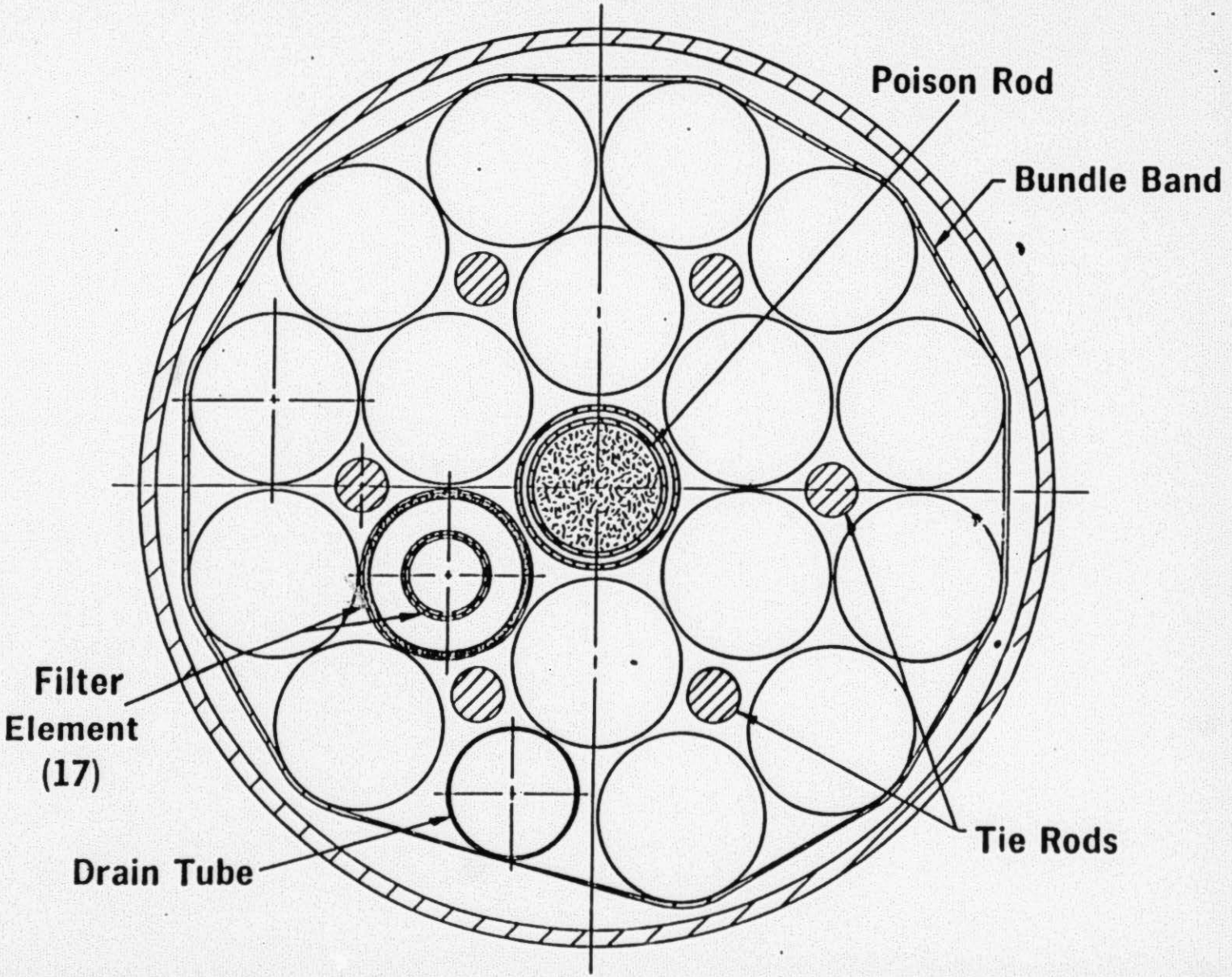

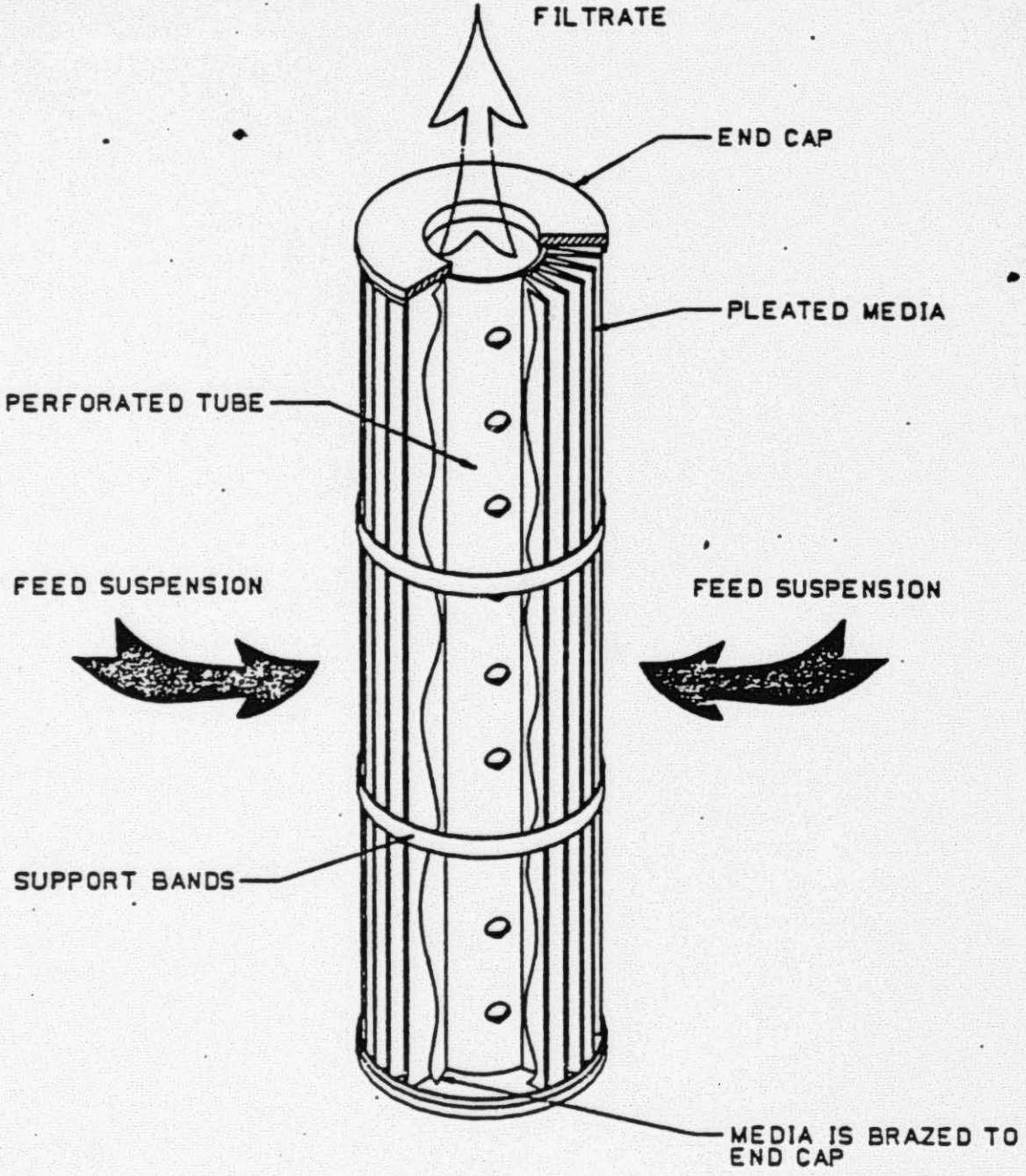

FIGURE 6
FILTER MODULE

Figure 7

Knockout Canister

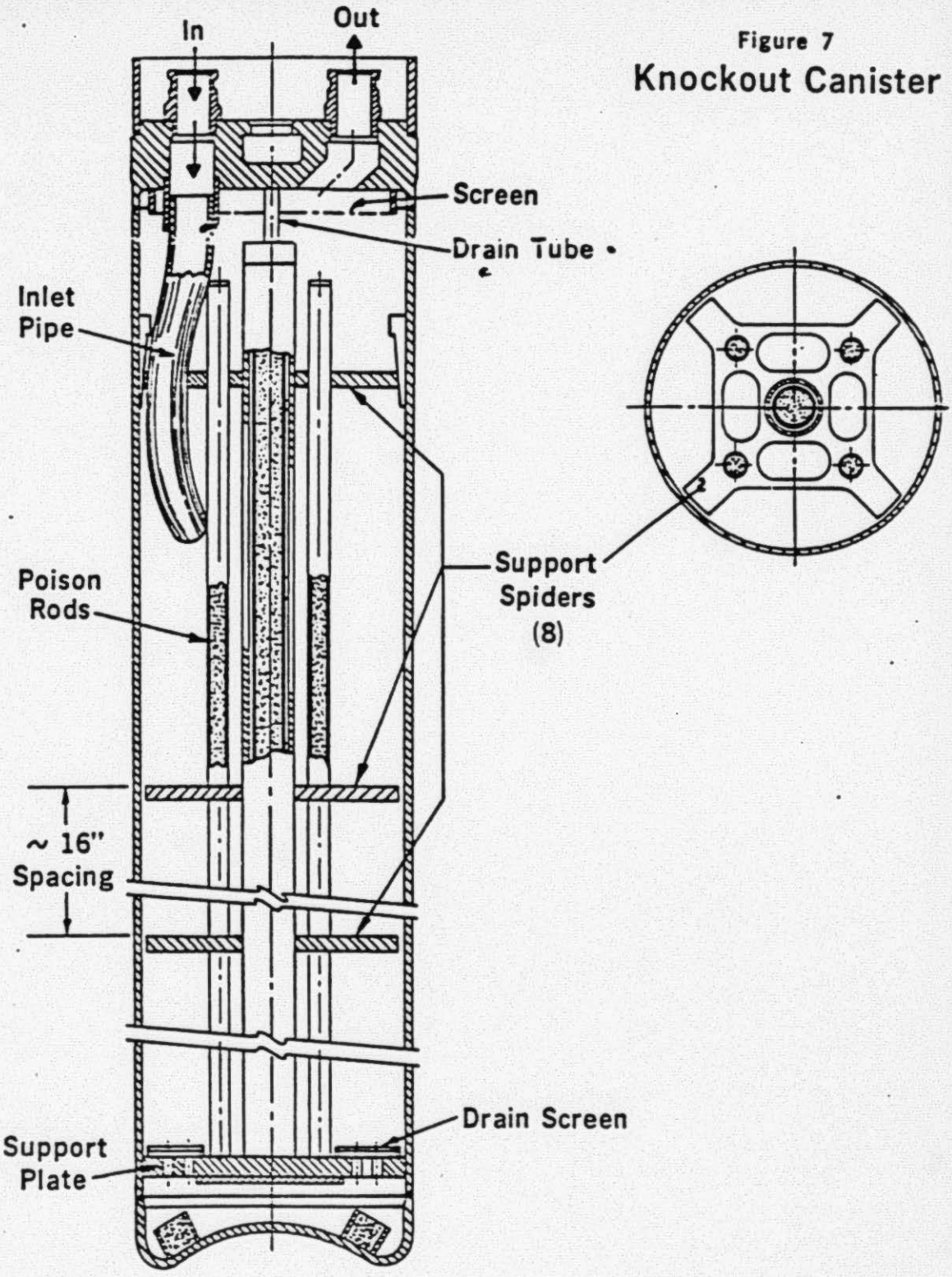

Figure 8

Knockout Canister-Cross Section at Mid-plane

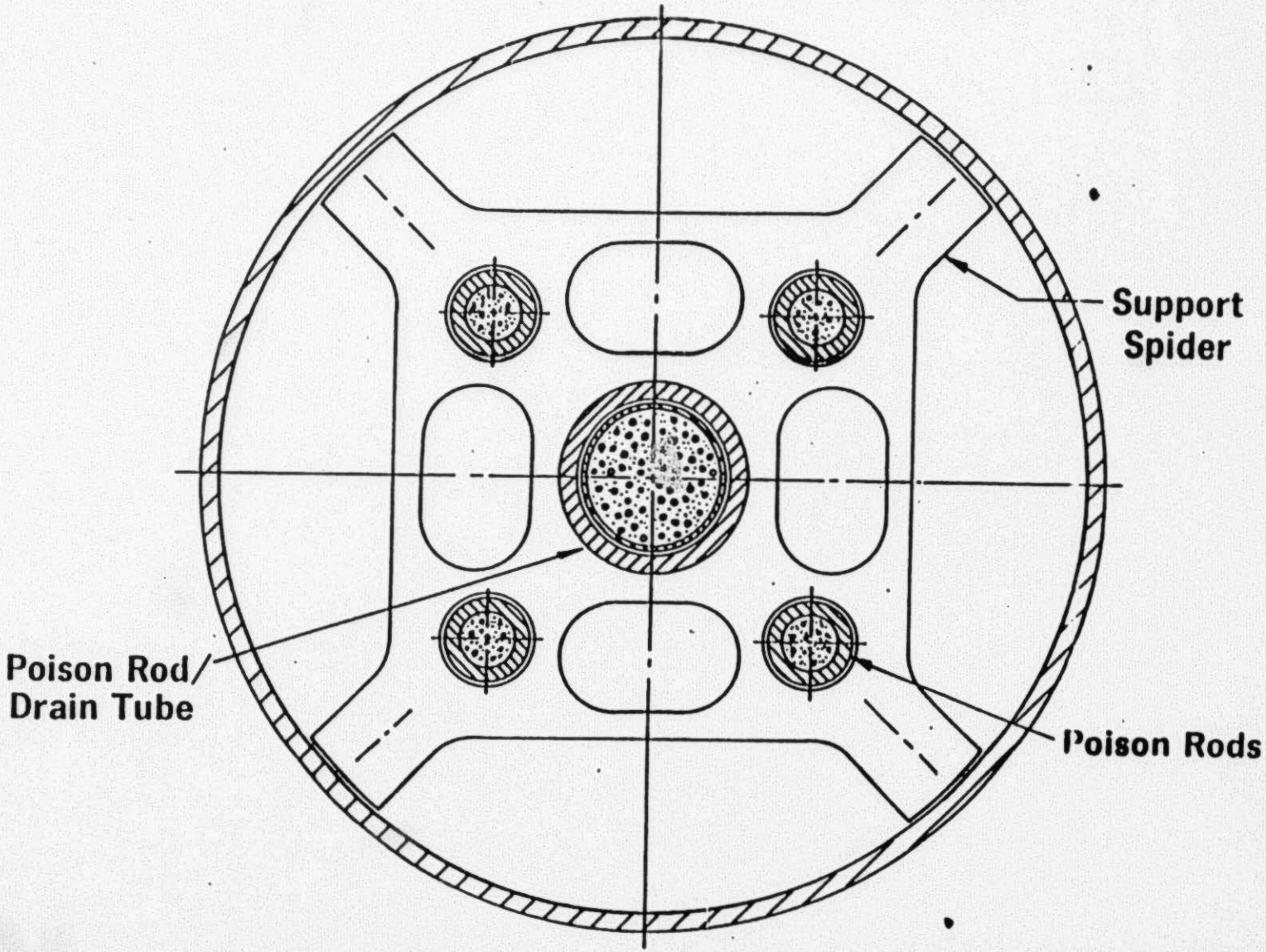

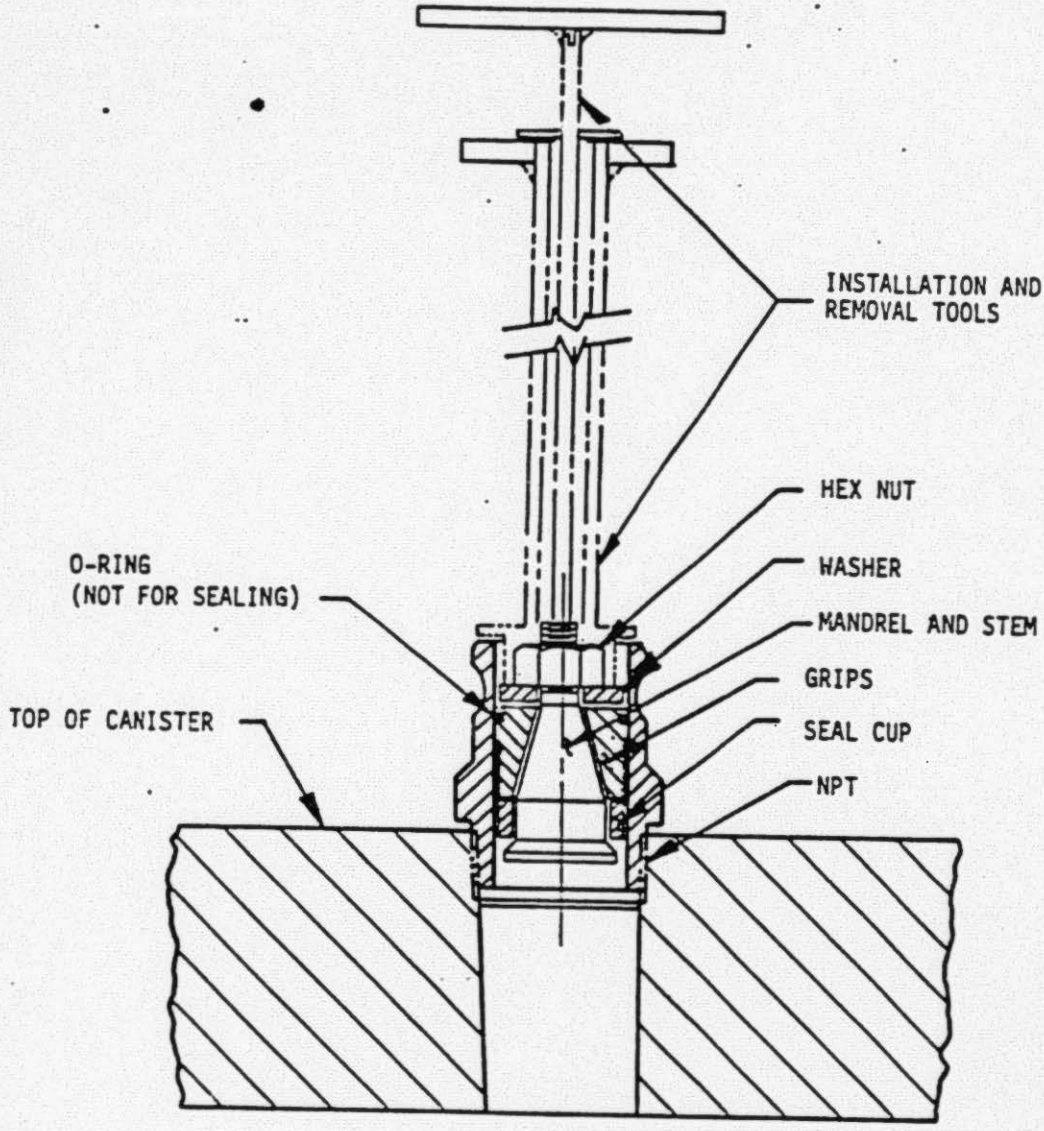

Figure 9

INLET/OUTLET FLOW FITTING THAXTON PLUG
AND INSTALLATION TOOL

TABLE 2

CANISTER DESIGN FEATURES

	Type of Canister			
	Fuel	Filter	Knockout	
Overall Length (max.)	150.0 in.	150.0 in.	150.0 in.	
Outer Diameter (nom.)	14.00 in.	14.00 in.	14.00 in.	
Canister Contents	Up to Partial Fuel Assemblies	Small Fines 0.5 to 800 microns	140 microns to Pellet Size (.375" dia x .600")	(1)
Total Inside Free Volume	6.75 ft^3	9.94 ft^3	10.73 ft^3	(1)
Usable Volume	6.45 ft^3	6.89 ft^3	9.10 ft^3	(1)
Debris Density Range*	215-400 lb/ft^3	169-431 lb/ft^3	212-462 lb/ft^3	(1)
Loaded Canister Wt. (Max.)				
- Dewatered in air	2800 lbs	2040 lbs**	2800 lbs	(1)
- Wet in air	3074 lbs	2513 lbs**	3204 lbs	(1)(2)
Empty Canister Wt. (Nom.)				
- In air	1230 lbs	1440 lbs	1046 lbs	(2)
- In water	400 lbs	624 lbs	230 lbs	(2)
Bottom Head Design	Reversed Dish	Reversed Dish	Reversed Dish	
Top Head Design	Removable Flat Plate (Bolted Closure)	Flat Plate w/Skirt (Welded Closure)	Flat Plate w/Skirt (Welded Closure)	
Valve Interfaces		2½" Inlet 2½" Outlet	2" Inlet 2" Outlet	
	3/8" Drain 1/4" Fill	3/8" Drain 1/4" Fill	3/8" Drain 1/4" Fill	

*provided by GPUN (1)

*based on 500 lbs payload and 100 lbs water remaining after dewatering (1)

E. STRUCTURAL ANALYSIS

INTRODUCTION

As part of the core removal system, the canisters function as receptacles for the core debris during defueling and as long term storage containers afterwards. To accommodate large pieces of debris, the fuel canister is placed into position with its top closure removed. After it is loaded, the closure head is installed with a 15 psi pressure relief valve. The filter and knockout canister are connected via the couplings on the top head to either the vacuum (both canisters) or the water cleanup systems (filter only), both of which pressurize the canisters. A pressure relief in the system (the owner's responsibility) will prevent over pressurization. The design specification limits the design pressure to 150 psig. After being loaded, the canisters are removed from the reactor work area for dewatering and storage. A single point pickup interface for the handing tool is located in the center of the upper head.

The structural evaluation addresses both the loads imposed on the canister during loading and handling (normal operation) as well as postulated drops and shipping accidents (accident conditions). A combination of analytical methods and actual component testing is used to verify the adequacy of the design for the load cases defined in the design specification.[1] Acceptance criteria for normal operation is based on the ASME Pressure Vessel Code. For the accident condition, specific criteria are presented in the design specification which includes the possibility of leakage of the debris from the canister. The debris within the canister is maintained in a sub-critical condition as discussed in Section F.

NORMAL OPERATION

Normal operation of the canister as part of the defueling system imposes very small loads on the canister internals (the canister shell being addressed in the ASME code analysis). The largest load on the internals is the combined weight of the debris and internals. The configuration of the canisters is such that only the lower plate assembly that supports both the debris and internals experiences any significant loads. Results of the stress analysis shows a high margin of safety for this plate and its weld to the outer shell for all canister types.

Critical weld

Common to all three canister designs, the outer shell is a pressure vessel protecting against leakage of the canister's contents as well as providing structural support for the neutron absorbing materials. Underwater storage results in external (crushing) pressure being imposed on the canister while an internal (bursting) pressure is developed inside the canister (filter and knockout) when part of the operating system. Design pressures of 150 psig internal/30 psig external are specified in Reference 1 to bound the actual inservice conditions. To ensure its structural integrity, the pressure retaining boundary (Figure 11) consisting of the canister (outer shell, and upper and lower head) were analyzed to the requirements of the ASME Pressure Vessel Code, Section VIII.[2] Plutonium material contained within the core debris is classified as a toxic substance, therefore a "lethal" classification is required for the canisters. The affect of this designation is to restrict the type of welds that can be used and establishes the level of weld inspections required. Major shell welds, circumferential and longitudinal, are butt type welds with 100% radiographic (or ultrasonic in specific cases) inspection. As the pressure boundary components are fabricated from ASME code approved materials, types 304L or 316L stainless steel, they exhibit excellent structural properties and corrosion resistance properties. After final assembly, the canister will be hydrostatically tested to one and one-half times their maximum design pressure as a final verification of both the design and manufacturing process. Acceptance criteria for the hydro test is specified in Reference 1. It exceeds the ASME Code requirements of only a visual (1) (1)

inspection by requiring no visible leakage. Verification of the canister's structural design to the ASME requirements is presented in the code stress analysis (Attachment 1). A conservative upper bound of (2)
20 mils for the corrosion allowance for the thirty year life of the canister is used in calculating the required thicknesses. Table 4 shows (1)
a comparison of the ASME criteria - in terms of a maximum allowable pressure or a minimum required thickness - to the corresponding actual canister values.

Loading of the fuel canister presents two unique scenarios for evaluation. First is the capability of the lower support plate assembly to absorb the impact of debris accidently dropped into the canister. Results from the dynamic impact evaluation shows that the support assembly can accommodate loads up to 350 lbs dropped the full canister length without experiencing a failure of the plate-to-shell weld. Second is the resistance of the shroud inner wall to puncture or tearing (1)
during placement of debris within the canister. Examinations of the drop test shrouds (Reference 14) showed no penetrations and indicate the (2)
inner wall is very resistant to debris impacts and scrapes.

During normal handling operations, the static plus dynamic loading (1)
considered in the design of the canister is 1.15 times the static lifted weight (Appendix D of (1)). As specified in NUREG-0612[6] and ANSI N14.6[7], stress design factors of 3 times the static plus dynamic load for comparisons to the yield strength of the material and 5 for the ultimate strength comparisons were used. Results from the structural evaluation show acceptable margins of safety for these loadings.

When a canister is being seated or lowered onto its side, a 2 g (7000 (1)
lbs) limit is recommended as a reasonable level based on B&W experience with fuel handling equipment to prevent damage which could affect component performance. This translates to a hoist speed of approximately 6 FPM at impact.

A dewatering system is used to remove the slosh water from all canisters prior to shipment. Inert Argon or Nitrogen gas is introduced into the

canister via the purge fitting in the upper head. This slowly forces the water in the canister cavity into the lower plenum, up the drain tube and to exit the canister. During this procedure, a small pressure differential is developed across the debris screen (and lower support plate) and drain tube. Large margins of safety were calculated for the drain tube using ASME code methods of analysis of a tube loaded by external pressure.

During shipping, the canister experiences various minor acceleration loads. Consistent with generally accepted industry standards (10 CFR 71.45, etc.) and to preclude possibly troublesome deformations such as local bending of the skirt, the canister/cask interface loads should be limited to 10g in axial and lateral directions. (2) (2)

ON-SITE ACCIDENT CASES (2)

As described in the design specification[1], a canister can be subjected to any one of a series of postulated accidents. For these cases, the design criteria is that for the predicted deformed geometry, criticality control (structural integrity of poison components) must be maintained and the canister must be subcritical. Deformation of and/or leakage from the canister is acceptable. Structural analysis methods were used to determine the extent of the deformation of the shell and canister internals. Impact velocities, Table 3, were calculated for the canister drops listed in the specification. Based on these velocities, strain energy methods were used to compute the impact loads associated with the various postulated drops. Results of these analyses as well as the shipping loading are shown in Table 5. Vector combinations of the horizontal and vertical (axial and lateral) components were used to determine the effects of a drop at any orientation. The vertical drop cases reflect the stiffness of the canister's outer shell without any interaction with the internals.

In the vertical drop cases, the same deformation will occur irrespective of the canister type. This is in contrast to the side drop impact loads that differ significantly as a function of the structural stiffness of (1)

the canister internals (see Table 5). For the bottom impact, all the shell deformation occurs below the lower support plate in the lower head region. Test results from simulated fuel canister drops (Reference 14) have verified this as well as showing that the support-to-shell weld does not fail. An upper bound on the shell deformation was computed using the ANSYS[6] computer code and the results are presented in Figure 12 along with the actual test results. The predicted geometry conservatively assumed failure of the support plate weld. This deformed shape also bounds the shell behavior for a head (upside-down canister) drop by conservatively assuming the canister skirt and fitting do not absorb a significant amount of energy by buckling. (1)(2) (1) (1)

To study the consequences of filter and knockout canister vertical and horizontal drops, their internals were analyzed by finite element methods using the ANSYS computer program. This analysis incorporated the actual nonlinear properties of the material. Geometric constraints imposed by the shell were accounted for by limiting the displacement of supports. (1)

In the filter canister criticality control is provided by the central B_4C poison rod coupled with the mass of steel within the 17 filter element drain tubes and six tie rods. Using the end caps of the filter modules as deflection limiters (they are required to have .250" minimum axial overlap), the entire tube array deflection is limited to 1.6" under all postulated accidents. This analysis is conservative as it does not take into account the 5 circumferential bands around the array at various elevations or the viscosity of the filter cake bed, both of which would tend to maintain the standard spacing. Using the resultant deformed geometry, which would be a "freeze frame" before the array bounced back closer to the original position, the criticality criteria were met (see Section F). (1) (1)

Criticality control in the knockout canister is provided by the central B_4C poison rod coupled with four outer rods. Results from the analysis show that the criticality components remain essentially elastic during all postulated accidents and maximum instantaneous displacements are less than .85 inch. As in the case of the filter canister, the resultant "freeze frame" deformed geometry successfully met the criticality criteria (see Section F). (1)(2) (2)

The fuel canisters, with their square-within-a circle geometry, exhibit a different behavior pattern than the other canisters. For both the vertical and side drops, the fuel canister internals will not experience any significant deformations other than the head deformations discussed previously. Lightweight concrete filling the void between the square inner shroud and circular outer shell provides continuous lateral support to both the outer shell and the shroud. This results in a distributed loading function for horizontal drops and allows only insignificant deformations in the shroud shape. Previous testing (Reference 14) has demonstrated that the lower support plate remains in place for design drops, even while supporting a mass equal to the shroud, the payload and the concrete. The resultant lack of deformation for the fuel canister drop cases make the criticality analysis for the standard design applicable as well as for the faulted design (see Section F). (1) (2)

In addition, the hydraulic response of a loaded, but not dewatered, canister dropped from the design heights has been analyzed. This scenario would result in a pressure pulse of approximately 1700 psi at the non-contact end of the canister. The pressure relief valve would be momentarily choked, but the fitting plugs and caps are designed to stay in place at that pressure and no debris leakage would occur from this cause. Any amount of dewatering would provide an air pocket shock absorber which would make the pressure pulse negligible. (1) (2)

TABLE 3

CANISTER LOAD CASES

Normal Operation			
1)	Design Pressure @ 180°F	+ 150 psi (Internal) - 30 psi (External)	(3)
2)	ASME Hydro Test @ Room Temperature	+ 225 psi (Internal)	(1)
3)	Handling	2 g Impact Load	(1)
		1.15 g Dynamic Load	(1)
4)	Shipping - Axial and Lateral	10 g Impact Load	(1)
Accident Conditions			
1-a)	Vertical Drop with Impact Velocity of 34.9 fps (6' 1 1/2" in air followed by 19'6" in water)		(2)
b)	Horizontal Drop with Impact Velocity of 27.3 fps (11' 7" in air)		(2)
c)	Any Orientation Drop - A Combination of vertical and horizontal drops through the distances listed above		(1)
2)	Shipping Load - 40 g's Axially		
3)	Shipping Load - 100 g's Lateral Impact at the interface with the shipping cask (including 1/2" max. gap)		(1)

TABLE 4

SUMMARY OF ASME CODE ANALYSIS

COMPONENT (CANISTER)	LOADING	DESIGN CRITERIA		ACTUAL VALUE	MARGIN	
Basic Shell (All)	Internal Pressure & Handling	Circumferential Stress	Allowable Pressure 325 psi	Design Pressure 155 psi	1.10	(1)
	Internal Pressure	Longitudinal Stress	Allowable Pressure 655 psi	Design Pressure 155 psi	+ High	(1)
	External Pressure	Stability	Allowable Pressure 73 psi	Design Pressure 30 psi	+ 1.43	
Lower Head (All)	Internal Pressure	Stability	Allowable Pressure 375 psi	Design Pressure 155 psi	+ 1.42	
	External Pressure	Stress	Allowable Pressure 964 psi	Design Pressure 30 psi	+ High	(1)
Upper Head (Filter & Knockout)	Differential Pressure & Handling	Combined Stress	Required Thickness 1.16 inch	Actual Thickness 3.34 inch	+ 1.88	
Closure Head (Fuel)	Differential Pressure & Handling	Combined Stress	Required Thickness 1.60 inch	Actual Thickness 3.34 inch	+ 1.09	

TABLE 4

SUMMARY OF ASME CODE ANALYSIS
(Cont'd)

COMPONENT (Canister)	LOADING	DESIGN CRITERIA		ACTUAL VALUE	MARGIN
Bulkhead Flange (Fuel)	Bolt Torque	Flange Moment	Required Thickness 1.21 inch	Actual Thickness 1.42 inch	+ .17
Closure Bolts (Fuel)	Pressure & Handling	Tension Area	Required Area .88 $inch^2$	Actual Area 2.48 $inch^2$	+ 1.82
	Pressure & Handling	Thread Engagement	Required Length 1.00 inch	Actual Length 1.13 inch	+ .12

TABLE 5

DESIGN IMPACT LOADS

	CANISTER TYPE			
	KNOCKOUT	FUEL	FILTER	
NORMAL OPERATION - HANDLING				
Vertical & Horizontal	2g	2g	2g	(1)
NORMAL OPERATION - SHIPPING				
Axial & Lateral	10g	10g	10g	
ON-SITE DROP CASES				
Vertical (Bottom Impact)	102g	102g	102g	
(Top Impact)	131g	131g	131g	
Horizontal	365g (locally on internals)	(Test)	157g	(2)
SHIPPING ACCIDENT				
Axial	40g	40g	40g	
Lateral	100g	100g	100g	

FIGURE 11

PRESSURE RETAINING BOUNDARY

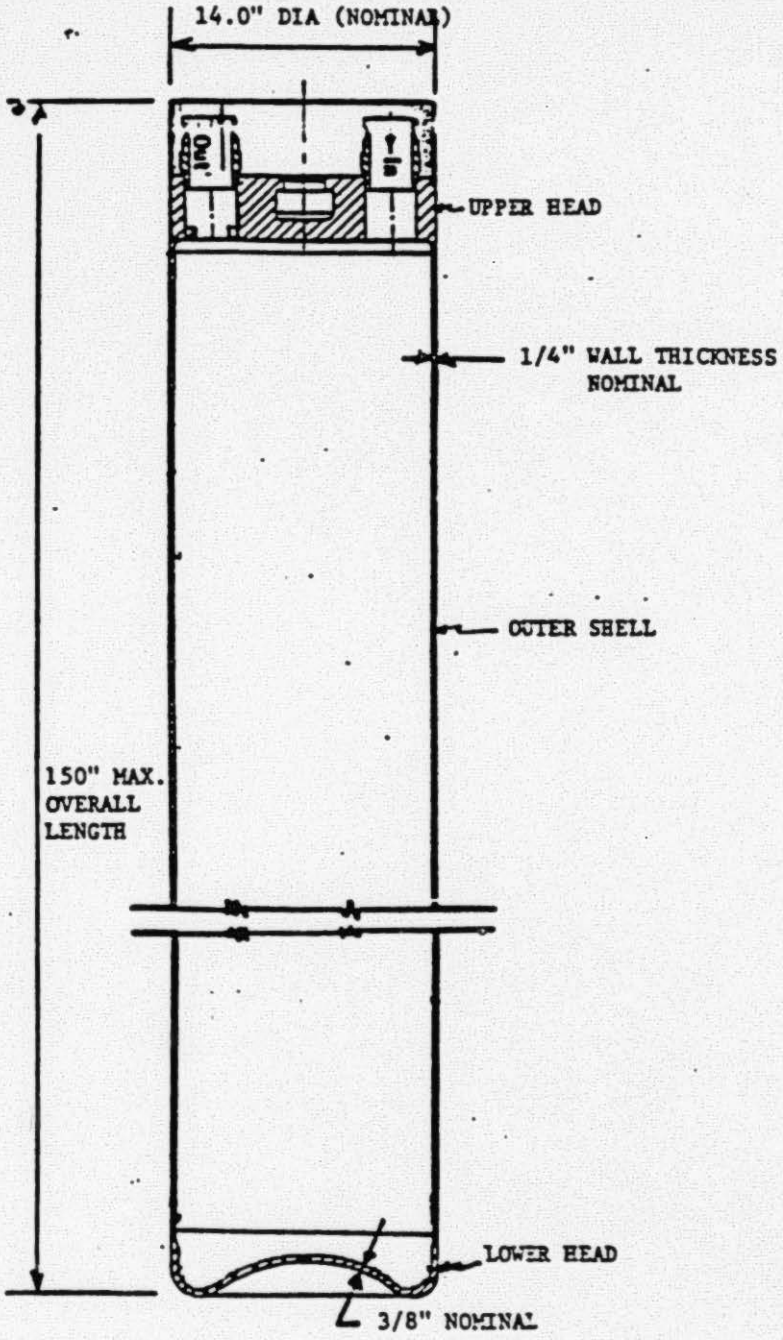

FIGURE 12

SHELL DEFORMATIONS - VERTICAL DROP (ALL CANISTERS)

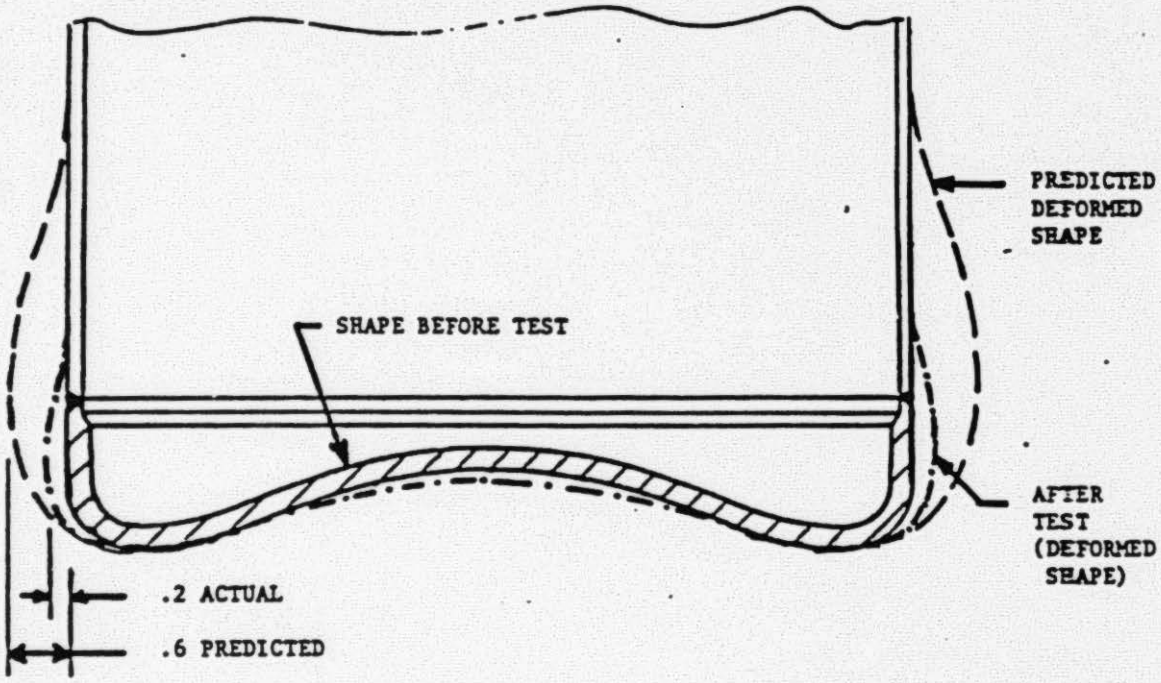

G. OPERATIONAL DESCRIPTION/PLANT INTERFACES

The sequence of operations detailed in this section describe major steps in the loading, dewatering and preparing of the canister for shipment. It represents a conceptual series of events used to identify the plant interfaces.

A listing of the major plant services required to support the various canister operations is also given in this section. (1)

Operation Sequence - Fuel Canister

1. Empty canister with closure head is hydrotested and code stamped after final fabrication is completed. Canister and closure head are a matched pair subsequent to this operation with identical serial numbers. (Bolts may be replaced or interchanged).

2. Empty canister shipped to TMI-2 site.

3. The canister is loaded using a protective head to prevent damage to the seal surface on the bulkhead.

4. When loading is completed, the canister is ready for installing the top closure. The bulkhead seal surface and bolt holes are cleaned and inspected to ensure they are free of any debris. The seal surface of closure head is inspected to ensure it is clean, seals are acceptable and all bolts are in place. It is important that these areas and surfaces are clean to ensure a proper seal can be established. Serial numbers are verified to indicate a correctly matched pair. The temporary pressure relief valve is installed on the closure head before the head is placed in the work area. The upper closure head is installed on the canister and the bolts are torqued in a star pattern to 5-10 ft-lbs and then to 40-50 ft-lbs. Final verification of the bolt torques may be done before or (1)

after the can is moved.

5. Canister with closure head is transported to the storage racks or dewatering station. (1)

6. Final verification of closure head bolt torque, if not accomplished before the canister is removed from the loading station, will be at the dewatering station prior to dewatering. (1)

7. The drain and fill lines are attached to quick disconnect fittings on the canister's top closure head. Argon or Nitrogen is introduced into the upper canister region, driving the water out through the drain tube in the lower plenum. This drain line will be connected to a defueling water processing system. (1)

8. The canister is back filled to 25-30 psia with Argon or Nitrogen.

9. Canister is transferred to storage rack.

10. Canister is removed from storage rack, placed in the dewatering station, pressure relief valve is removed, canister is pressure checked, Hansen fittings are capped, and then the canister is loaded into the shipping cask. Excessive space between canister and shipping cask internal supports will be filled with impact absorbing material. (1)

Operation Sequence - Filter Canister/Knockout Canister

1. Empty canister is hydrotested and code stamped.

2. Empty canister shipped to TMI-2 site.

3. Empty canister is installed into its system and fluid lines are connected.

4. When loading is completed, the canister is disconnected, the flow

fittings are plugged, the temporary pressure relief valve is installed and the canister is moved to the storage racks or dewatering station. Fill and drain lines are attached to quick disconnect fittings on the canister's top closure head. Nitrogen or Argon is introduced into the upper canister region, driving the water out through the drain tube at the lower plenum. This drain line will be connected to a defueling water processing system. (1)

5. The canister is back filled to 25-30 psia with Argon or Nitrogen.

6. Canister is transferred to storage rack.

7. Canister is removed from storage rack, placed in the dewatering station, the presssure relief valve is removed, canister is pressure checked, the Hansen fittings are capped and canister is loaded into the shipping cask. Excessive space between canister and shipping cask internal supports will be filled with impact absorbing material. (1)

Major Plant Services/Interface

Pre-post loading operations:	Video and lighting to view top of canister (as required by GPUN)	(1)
	Storage rack for Fuel Canister top closures (by GPUN)	
	Handling Tools (by B&W)	
	Tooling to connect/disconnect the inlet and outlet lines and pressure relief valve (by B&W or Westinghouse).	
	Tooling to install flow fitting plugs, temporary or permanent (by B&W).	(1)
Top closure installation: (fuel canister only)	Video and lighting to view top of canister and to inspect top closure plate seals and bolts.	
	Tooling to clean sealing surfaces of fuel canister (by GPUN)	

	Tooling to install closure and torque bolts (by B&W and GPUN).
Dewatering /Leak Testing:	Dewatering station. (by GPUN)
	Source supply of Argon or Nitrogen gas at 30 psig min (by GPUN).
	Drain line to defueling water processing system for water expelled from canister (by GPUN). (1)
	Tooling to connect/disconnect the fill and drain lines, pressure relief valve and Hansen fitting caps (by B&W).